Technical Datasheet

Product Code: **BET5227FT**

Product Description: **Ultra Flat S i.life Shower Tray 90X90 Sand**

Specification

Material:	Stone Resin
Style:	Contemporary
Colour:	Sand
Product Guarantee:	5 Years
Barcode:	8014140492696
Product Length (mm):	900
Product Width (mm):	900
Product Height (mm):	30
Product Weight (kg):	27.5 kg

Key Features

- Create an aesthetic that is part of the constantly evolving contemporary style
- Anti slip feature is included for added safety measure
- Manufactured from stone resin with a gel coat material
- Compatible with Ideal Standard shower enclosures
- 90mm waste to be purchase separately L6307AA
- Available in 4 contemporary matt stone finishes

Technical Drawing

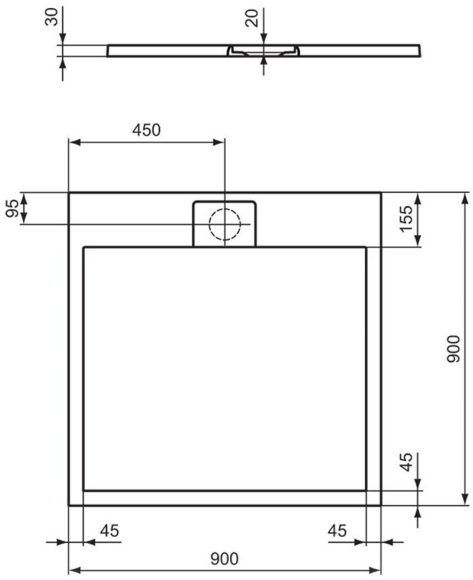

Dimensions: All measurements are in millimetres and are subject to normal manufacturing variations.

Due to a continuing development programme to improve design and performance, we reserve all rights to vary specifications without prior notice. Please note, all accessories are for photographic purposes only.